Cambridge International AS & A Level

Cambridge International Examinations
Cambridge International Advanced Subsidiary and Advanced Level

CANDIDATE NAME

CENTRE NUMBER | | | | | |

CANDIDATE NUMBER | | | | |

2113983604

PHYSICS **9702/21**

Paper 2 AS Level Structured Questions **October/November 2018**

1 hour 15 minutes

Candidates answer on the Question Paper.

No Additional Materials are required.

READ THESE INSTRUCTIONS FIRST

Write your Centre number, candidate number and name on all the work you hand in.
Write in dark blue or black pen.
You may use an HB pencil for any diagrams or graphs.
Do not use staples, paper clips, glue or correction fluid.
DO **NOT** WRITE IN ANY BARCODES.

Answer **all** questions.

Electronic calculators may be used.
You may lose marks if you do not show your working or if you do not use appropriate units.

At the end of the examination, fasten all your work securely together.
The number of marks is given in brackets [ ] at the end of each question or part question.

This document consists of **14** printed pages and **2** blank pages.

DC (SR/FC) 146708/4
© UCLES 2018

CAMBRIDGE International Examinations

Data

speed of light in free space	$c = 3.00 \times 10^{8}\,\text{m s}^{-1}$
permeability of free space	$\mu_0 = 4\pi \times 10^{-7}\,\text{H m}^{-1}$
permittivity of free space	$\varepsilon_0 = 8.85 \times 10^{-12}\,\text{F m}^{-1}$
	$(\frac{1}{4\pi\varepsilon_0} = 8.99 \times 10^{9}\,\text{m F}^{-1})$
elementary charge	$e = 1.60 \times 10^{-19}\,\text{C}$
the Planck constant	$h = 6.63 \times 10^{-34}\,\text{J s}$
unified atomic mass unit	$1\,\text{u} = 1.66 \times 10^{-27}\,\text{kg}$
rest mass of electron	$m_e = 9.11 \times 10^{-31}\,\text{kg}$
rest mass of proton	$m_p = 1.67 \times 10^{-27}\,\text{kg}$
molar gas constant	$R = 8.31\,\text{J K}^{-1}\,\text{mol}^{-1}$
the Avogadro constant	$N_A = 6.02 \times 10^{23}\,\text{mol}^{-1}$
the Boltzmann constant	$k = 1.38 \times 10^{-23}\,\text{J K}^{-1}$
gravitational constant	$G = 6.67 \times 10^{-11}\,\text{N m}^2\,\text{kg}^{-2}$
acceleration of free fall	$g = 9.81\,\text{m s}^{-2}$

© UCLES 2018

Formulae

uniformly accelerated motion	$s = ut + \frac{1}{2}at^2$ $v^2 = u^2 + 2as$
work done on/by a gas	$W = p\Delta V$
gravitational potential	$\phi = -\frac{Gm}{r}$
hydrostatic pressure	$p = \rho gh$
pressure of an ideal gas	$p = \frac{1}{3}\frac{Nm}{V}\langle c^2 \rangle$
simple harmonic motion	$a = -\omega^2 x$
velocity of particle in s.h.m.	$v = v_0 \cos \omega t$ $v = \pm \omega \sqrt{(x_0^2 - x^2)}$
Doppler effect	$f_o = \frac{f_s v}{v \pm v_s}$
electric potential	$V = \frac{Q}{4\pi\varepsilon_0 r}$
capacitors in series	$1/C = 1/C_1 + 1/C_2 + \ldots$
capacitors in parallel	$C = C_1 + C_2 + \ldots$
energy of charged capacitor	$W = \frac{1}{2}QV$
electric current	$I = Anvq$
resistors in series	$R = R_1 + R_2 + \ldots$
resistors in parallel	$1/R = 1/R_1 + 1/R_2 + \ldots$
Hall voltage	$V_H = \frac{BI}{ntq}$
alternating current/voltage	$x = x_0 \sin \omega t$
radioactive decay	$x = x_0 \exp(-\lambda t)$
decay constant	$\lambda = \frac{0.693}{t_{\frac{1}{2}}}$

© UCLES 2018

[Turn over

Answer **all** the questions in the spaces provided.

1 **(a)** Define

(i) *displacement*,

.....

..... [1]

(ii) *acceleration*.

.....

..... [1]

(b) A remote-controlled toy car moves up a ramp and travels across a gap to land on another ramp, as illustrated in Fig. 1.1.

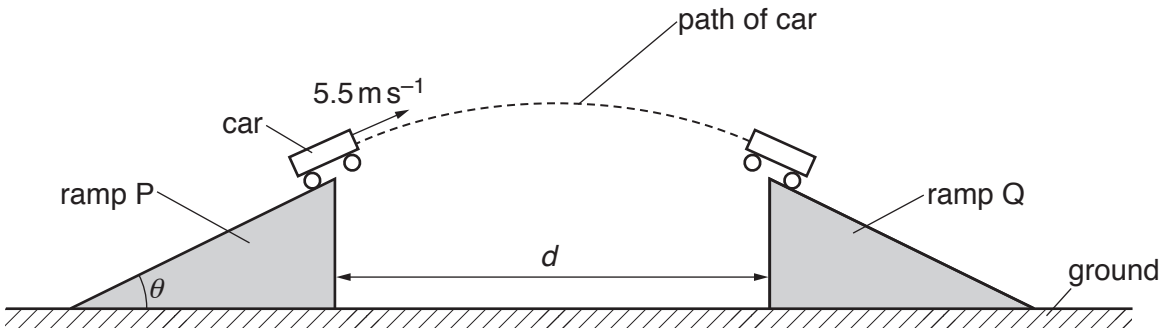

Fig. 1.1

The car leaves ramp P with a velocity of $5.5\,m\,s^{-1}$ at an angle θ to the horizontal. The horizontal component of the car's velocity as it leaves the ramp is $4.6\,m\,s^{-1}$. The car lands at the top of ramp Q. The tops of both ramps are at the same height and are distance *d* apart. Air resistance is negligible.

(i) Show that the car leaves ramp P with a vertical component of velocity of $3.0\,m\,s^{-1}$.

[1]

(ii) Determine the time taken for the car to travel between the ramps.

time taken = ... s [2]

© UCLES 2018

(iii) Calculate the horizontal distance d between the tops of the ramps.

d = ... m [1]

(iv) Calculate the ratio

$$\frac{\text{kinetic energy of the car at its maximum height}}{\text{kinetic energy of the car as it leaves ramp P}}.$$

ratio = ... [3]

(c) Ramp Q is removed. The car again leaves ramp P as in **(b)** and now lands directly on the ground. The car leaves ramp P at time $t = 0$ and lands on the ground at time $t = T$.

On Fig. 1.2, sketch the variation with time t of the vertical component v_y of the car's velocity from $t = 0$ to $t = T$. Numerical values of v_y and t are not required.

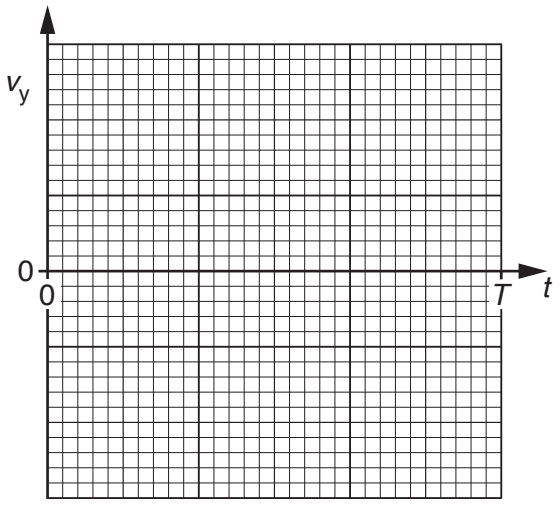

Fig. 1.2

[2]

[Total: 11]

BLANK PAGE

© UCLES 2018

2 A wooden block moves along a horizontal frictionless surface, as shown in Fig. 2.1.

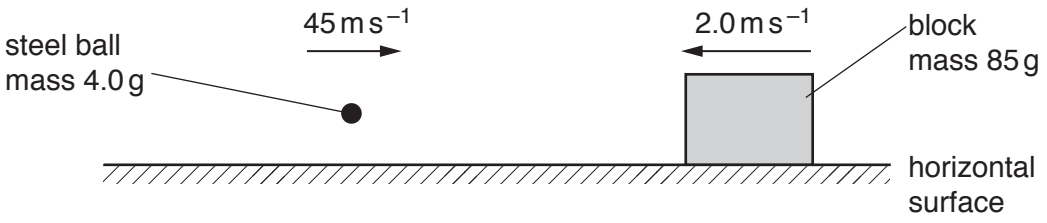

Fig. 2.1

The block has mass 85 g and moves to the left with a velocity of 2.0 m s^{-1}. A steel ball of mass 4.0 g is fired to the right. The steel ball, moving horizontally with a speed of 45 m s^{-1}, collides with the block and remains embedded in it. After the collision the block and steel ball both have speed *v*.

(a) Calculate *v*.

v = ... m s^{-1} [2]

(b) (i) For the block and ball, state

1. the relative speed of approach before collision,

relative speed of approach = ... m s^{-1}

2. the relative speed of separation after collision.

relative speed of separation = ... m s^{-1}
[1]

(ii) Use your answers in **(i)** to state and explain whether the collision is elastic or inelastic.

.....

..... [1]

(c) Use Newton's third law to explain the relationship between the rate of change of momentum of the ball and the rate of change of momentum of the block during the collision.

.....

.....

.....

..... [2]

[Total: 6]

© UCLES 2018

3 (a) (i) Define *power*.

.....

..... [1]

(ii) State what is meant by *gravitational potential energy*.

.....

..... [1]

(b) An aircraft of mass 1200 kg climbs upwards with a constant velocity of 45 m s^{-1}, as shown in Fig. 3.1.

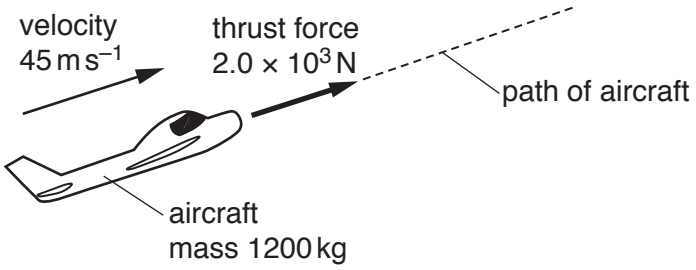

Fig. 3.1 (not to scale)

The aircraft's engine produces a thrust force of 2.0 × 10^3 N to move the aircraft through the air. The rate of increase in height of the aircraft is 3.3 m s^{-1}.

(i) Calculate the power produced by the thrust force.

power = ... W [2]

© UCLES 2018

(ii) Determine, for a time interval of 3.0 minutes,

1. the work done by the thrust force to move the aircraft,

work done = ... J [2]

2. the increase in gravitational potential energy of the aircraft,

increase in gravitational potential energy = ... J [2]

3. the work done against air resistance.

work done = ... J [1]

(iii) Use your answer in **(b)(ii) part 3** to calculate the force due to air resistance acting on the aircraft.

force = ... N [1]

(iv) With reference to the motion of the aircraft, state and explain whether the aircraft is in equilibrium.

.....

.....

..... [2]

[Total: 12]

© UCLES 2018

4 **(a)** State the principle of superposition.

.....

.....

..... [2]

(b) An arrangement for demonstrating the interference of light is shown in Fig. 4.1.

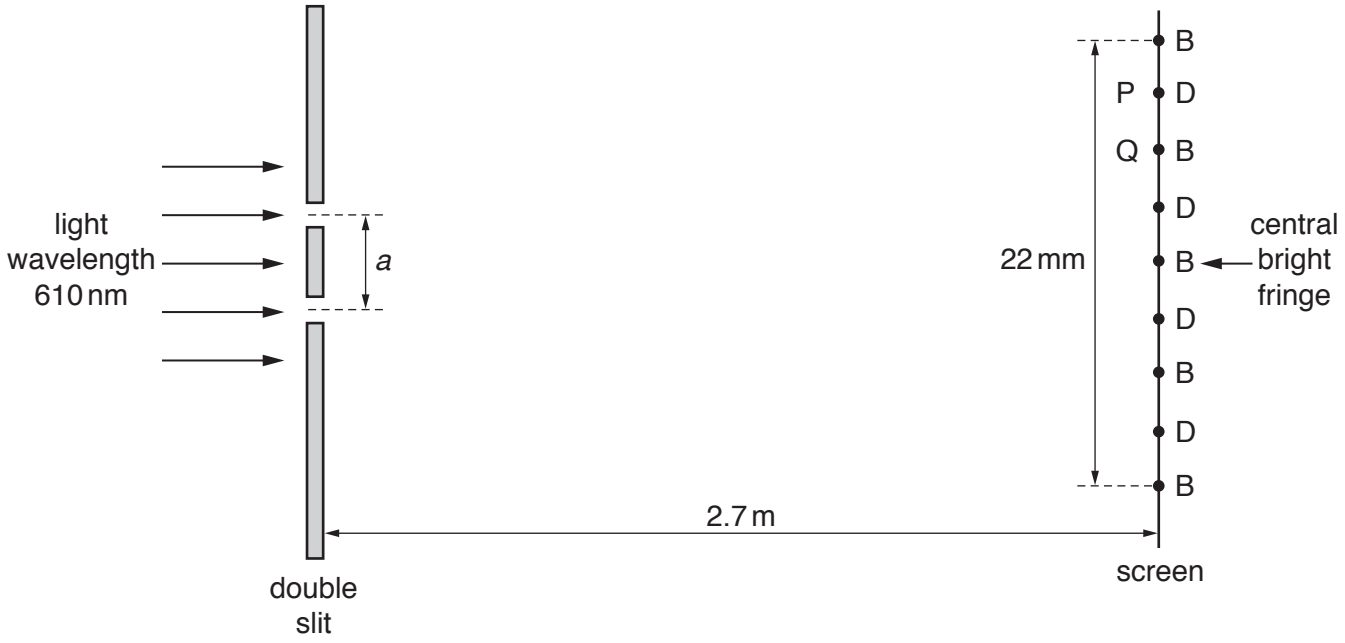

Fig. 4.1 (not to scale)

The wavelength of the light is 610 nm. The distance between the double slit and the screen is 2.7 m.

An interference pattern of bright fringes and dark fringes is observed on the screen. The centres of the bright fringes are labelled B and centres of the dark fringes are labelled D. Point P is the centre of a particular dark fringe and point Q is the centre of a particular bright fringe, as shown in Fig. 4.1. The distance across five bright fringes is 22 mm.

(i) The light waves leaving the two slits are coherent.

State what is meant by *coherent*.

.....

..... [1]

© UCLES 2018

(ii) **1.** State the phase difference between the waves meeting at Q.

phase difference = ... °

2. Calculate the path difference, in nm, of the waves meeting at P.

path difference = ... nm
[2]

(iii) Determine the distance *a* between the two slits.

a = ... m [3]

(iv) A higher frequency of visible light is now used. State and explain the change to the separation of the fringes.

.....

..... [1]

(v) The intensity of the light incident on the double slit is now increased without altering its frequency. Compare the appearance of the fringes after this change with their appearance before this change.

.....

.....

.....

..... [2]

[Total: 11]

© UCLES 2018

[Turn over

5 **(a)** State what is meant by an *electric field*.

.....

..... [1]

(b) A particle of mass m and charge q is in a uniform electric field of strength E. The particle has acceleration a due to the field.

Show that

$$a = \frac{Eq}{m}.$$

[2]

(c) A stationary nucleus X decays by emitting an α-particle to form a nucleus of plutonium, $^{240}_{94}\text{Pu}$, as shown.

$$\text{X} \longrightarrow {}^{240}_{94}\text{Pu} + \alpha$$

(i) Determine the number of protons and the number of neutrons in nucleus X.

number of protons = ...

number of neutrons = ...
[2]

(ii) The total mass of the plutonium nucleus and the α-particle is less than that of nucleus X. Explain this difference in mass.

.....

.....

.....

..... [2]

© UCLES 2018

(iii) The plutonium nucleus and the α-particle are both accelerated by the same uniform electric field.

Use the expression in **(b)** to determine the ratio

$$\frac{\text{acceleration of the } \alpha\text{-particle}}{\text{acceleration of the plutonium nucleus}}.$$

ratio = ... [2]

[Total: 9]

6 **(a)** State Kirchhoff's second law.

.....

.....

..... [2]

(b) An electric heater containing two heating wires X and Y is connected to a power supply of electromotive force (e.m.f.) 9.0 V and negligible internal resistance, as shown in Fig. 6.1.

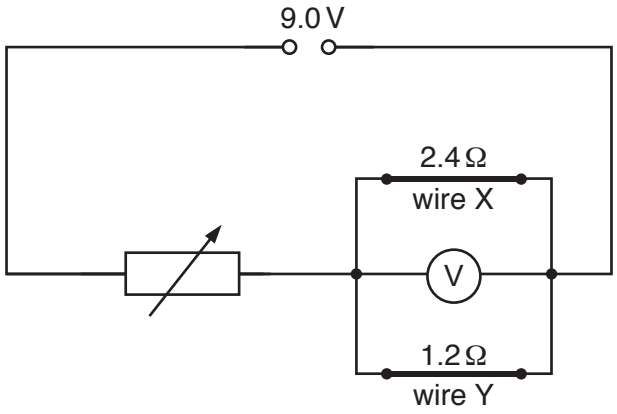

Fig. 6.1

Wire X has a resistance of 2.4 Ω and wire Y has a resistance of 1.2 Ω. A voltmeter is connected in parallel with the wires. A variable resistor is used to adjust the power dissipated in wires X and Y.

The variable resistor is adjusted so that the voltmeter reads 6.0 V.

(i) Calculate the resistance of the variable resistor.

resistance = ... Ω [3]

(ii) Calculate the power dissipated in wire X.

power = ... W [2]

© UCLES 2018

(iii) The cross-sectional area of wire X is three times the cross-sectional area of wire Y. Assume that the resistivity and the number density of free electrons for the metal of both wires are the same.

Determine the ratio

1. $\frac{\text{length of wire X}}{\text{length of wire Y}}$,

ratio = ... [2]

2. $\frac{\text{average drift velocity of free electrons in wire X}}{\text{average drift velocity of free electrons in wire Y}}$.

ratio = ... [2]

[Total: 11]

© UCLES 2018

BLANK PAGE

Permission to reproduce items where third-party owned material protected by copyright is included has been sought and cleared where possible. Every reasonable effort has been made by the publisher (UCLES) to trace copyright holders, but if any items requiring clearance have unwittingly been included, the publisher will be pleased to make amends at the earliest possible opportunity.

To avoid the issue of disclosure of answer-related information to candidates, all copyright acknowledgements are reproduced online in the Cambridge International Examinations Copyright Acknowledgements Booklet. This is produced for each series of examinations and is freely available to download at www.cie.org.uk after the live examination series.

Cambridge International Examinations is part of the Cambridge Assessment Group. Cambridge Assessment is the brand name of University of Cambridge Local Examinations Syndicate (UCLES), which is itself a department of the University of Cambridge.

© UCLES 2018